Refrigerant Pump

Original Operating Manual Series CAMR

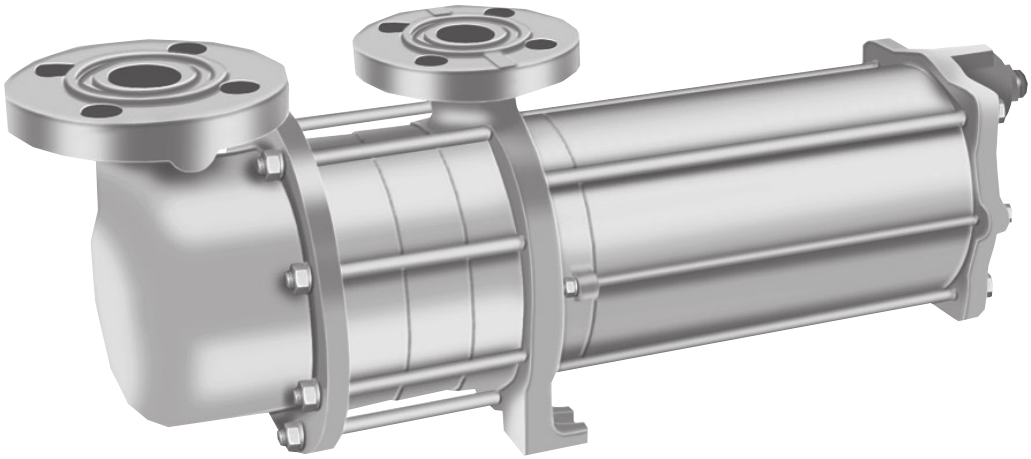

Edition BA-2025.04
Revision 10
Print-no. 1.0 EN

HERMETIC-Pumpen GmbH
Gewerbestrasse 51
D-79194 Gundelfingen,
Germany
phone +49 7615830-0
hermetic@hermetic-pumpen.com
http://www.hermetic-pumpen.com

We reserve the right to make technical changes.

CE

Table of contents

1 About this operating manual 6

1.1 Target groups 6

1.2 Other applicable documents 6

1.3 Warnings and symbols 7

2 Safety 8

2.1 Intended use 8
2.1.1 Prevention of obvious misuse (examples) 8
2.1.2 Residual risks and measures 9

2.2 General safety instructions 10
2.2.1 Product safety 10
2.2.2 Obligations of the operating company 10
2.2.3 Obligations by personnel 11

3 Layout and Function 12

3.1 Label 12

3.2 Layout 14

4 Transport, Storage and Disposal 15

4.1 Transport 15
4.1.1 Unpacking and inspection on delivery 15
4.1.2 Lifting 16

4.2 Treatment for storage 17

4.3 Storage 17

4.4 Disposal 17

5 Installation and connection 18

5.1 Preparing the setup 18
5.1.1 Checking the ambient conditions 18
5.1.2 Preparing the installation site 18
5.1.3 Preparing the foundation 18
5.1.4 Preparing the machine 19

5.2 Planning the piping 19
5.2.1 Specifying supports and flange connections 19
5.2.2 Specifying nominal diameters 19
5.2.3 Provide flow straightener in piping 20
5.2.4 Specifying the piping length 20
5.2.5 Optimising the cross-section and direction changes 21
5.2.6 Providing safety and control devices (recommended) 21
5.2.7 Making provisions for isolating and shutting off pipes 21
5.2.8 Allow measurements of the operating conditions 21
5.2.9 Installation Recommendations 22

5.3 Connecting the pipes 26
5.3.1 Keeping the piping clean 26
5.3.2 Mounting the supply pipe 26
5.3.3 Installing the discharge pipe 27
5.3.4 Ensure stress-free pipe connections 27

5.4 Electrical connection 27
5.4.1 Providing a motor protection switch 27
5.4.2 Connecting the motor 27
5.5 Frequency converter operation 28
5.5.1 Approved frequency range 28
5.5.2 Output filter 28
5.5.3 Installation and operation 29
5.5.4 Avoidance of rapid frequency changes 29
6 Operation 30
6.1 Putting the machine into service for the first time 30
6.1.1 Identifying the machine type 30
6.1.2 Checking the shutdown period 30
6.1.3 Filling up and venting 30
6.1.4 Checking the sense of rotation 31
6.1.5 Turning On 32
6.1.6 Switching off 32
6.2 Operating 33
6.2.1 Turning on 33
6.2.2 Switching off 33
6.3 Shutting down the machine 34
6.4 Start-up following a shutdown period 34
6.5 Operating the stand-by pump 35
7 Maintenance 36
7.1 Inspections 36
7.2 Repairs 37
7.2.1 Disassembly 38
7.2.2 Returning the pump to the manufacturer 40
7.2.3 Assembly 40
7.3 Ordering spare parts 41
8 Troubleshooting 42
8.1 Malfunctions 42
8.2 Fault rectification 42
8.3 Contact the manufacturer 44
9 Appendix 45
9.1 Recommended spare parts 45
9.2 Technical specifications 45
9.2.1 Ambient conditions 45
9.2.2 Sound pressure level 45
9.3 Safety certificate 46
9.4 Declarations in accordance with the EC Machinery Directive 48
9.4.1 Declaration of conformity in accordance with the EC Machinery Directive 48

List of figures

Fig. 1: Pump type label (on the name plate) 12
Fig. 2: Motor type label (on the name plate) 12
Abb. 3: Typenschild (Beispiel) 13
Fig. 4: CAMR layout (example CAMR 2/3) 14
Fig. 5: Fastening the lifting gear to the pump unit 16
Fig. 6: Fastening lifting gear to pump unit with base plate 16
Fig. 7: Piping with flow straightener 20
Fig. 8: Feed line and calming section 20
Fig. 9: Arrangement of vortex breakers at the vessel outlet 22
Fig. 10: Vessel inlet/vessel outlet arrangement 23
Fig. 11: Vessel inlet/vessel outlet arrangement 23
Fig. 12: Parallel operation arrangement 23
Fig. 13: Slow pressure/temperature drop 23
Fig. 14: Automatic venting (single pump - parallel pumps) 25
Fig. 15: Dismounting the carbon bearing 39
Fig. 16: Safety certificate 47
Fig. 17: Declaration of conformity in accordance with the EC Machinery Directive 48

List of tables

Tab. 1: Target groups and their duties 6
Tab. 2: Other applicable documents and their purpose 6
Tab. 3: Warnings and consequences of disregarding them 7
Tab. 4: Symbols and their meaning 7
Tab. 5: Measures after longer storage/shutdown periods 19
Tab. 6: Measures to be taken if the machine is shut down 34
Tab. 7: Measures depending on the behavior of the pumped liquid 34
Tab. 8: Measures for return 40
Tab. 9: Malfunction/number assignment 42
Tab. 10: Fault table 44
Tab. 11: Recommended spare parts 45

1 About this operating manual

This manual:

- Is part of the machine
- Applies to all pump series listed
- Describes safe and appropriate operation during all operating phases

It is strictly prohibited to copy all or part of these instructions, to spread or to use them without authorization for competitive purposes or to release them to third parties.

1.1 Target groups

Target group	Duty
Operating company	▶ Keep this manual available at all times at the site where the equipment is operated, even during later use. ▶ Ensure that personnel read and follow the instructions in this manual and the other applicable documents, especially all safety instructions and warnings. ▶ Observe any additional rules and regulations referring to the system
Qualified personnel, fitter	▶ Read, observe and follow this manual and the other applicable documents, especially all safety instructions and warnings.

Tab. 1: Target groups and their duties

1.2 Other applicable documents

Document	Purpose
Tightening torques	Installation of the machine
Performance curve	Operating limits
Declaration of conformity	Legally binding confirmation that the machine fulfills all requirements of the applicable EC guideline(s) (→ 9.4 Declarations in accordance with the EC Machinery Directive, page 48).
Dimensional drawing	Setup dimensions, connection dimensions, etc.
Brochuret	Technical specifications, operating limits
Parts list, sectional drawing	Ordering spare parts
Maximum support load table	Maximum permissible forces and torques at the supports
Technical specification	Technical specifications, conditions of operation
Supplier documentation	Technical documentation for parts supplied by subcontractors

Tab. 2: Other applicable documents and their purpose

1.3 Warnings and symbols

Warning		Risk level	Consequences of disregard
⚠	**DANGER**	Immediate acute risk	Death, serious bodily harm
⚠	**WARNING**	Immediate acute risk	Death, serious bodily harm
⚠	**CAUTION**	Potentially hazardous situation	Minor bodily harm
	NOTE	Potentially hazardous situation	Material damage

Tab. 3: Warnings and consequences of disregarding them

Symbol	Meaning
⚠	Safety warning sign ▶ Take note of all information highlighted by the safety warning sign and follow the instructions to avoid injury or death.
▶	Instruction
1. , 2. , ...	Multiple-step instructions
✓	Precondition
→	Cross-reference
ℹ	Information, recommendation

Tab. 4: Symbols and their meaning

2 Safety

The manufacturer does not accept any liability for damage resulting from disregard of any parts of this documentation.

2.1 Intended use

- Only operate the machine with the piping connected.
- Only use the machine within the limits of the technical specifications (→ Technical specifications).
- Pumped medium
  - Only use the machine to pump the agreed pumped media (→ Technical specifications).
  - Note the specified physical properties of the pumped medium, such as temperature, density, viscosity, specific heat and vapour pressure (→ Technical specifications)
- Electric motor
  - Operate the electric motor only with the voltage and frequency specified (→ Technical specifications).
- Operating conditions
  - The delivery height, system pressure and delivery rate must always be within the specified limits (→ Technical specifications).

2.1.1 Prevention of obvious misuse (examples)

- Pumping liquids containing solids is not permitted.
- Pumping liquids containing impurities is not permitted. It can cause cavitation and damage to the pump.
- Do not use in explosion-hazard areas.
- Avoid dry-running
  - Dry running causes severe damage, such as destruction of the sleeve bearings and pump components, within a few seconds.
  - Ensure that the pump is always filled with pumping liquid.
  - Bleed the pump completely before the initial start-up.
- Avoiding cavitation
  - Comply with the minimum suction head (→ 5.2.4 Specifying the piping length, page 20).
  - Fully open the suction-side valve and do not use it to adjust the flow.
  - Monitor the suction-side filter.
  - Ensure that the flow rate remains within the specified limits (→ technical specification).
- Avoiding overheating
  - Do not operate the pump while the pressure-side fitting is closed.
  - Observe the minimum flow rate (→ technical specification).
- Avoiding overloading
  - Observe the maximum flow rate (→ technical specification).
- Remove covers, transport and sealing covers before installation.

2.1.2 Residual risks and measures

Residual risk	Measures by the operating company
Cuts while working without personal protective equipment.	Observe warnings in the operating manual. Training for personnel. Provide and use personal protective equipment.
Electric shock: • Motor not properly electrically connected • Machine is not, or incorrectly, grounded • Access by unauthorized persons	Observe warnings in the operating manual. Training for personnel. Prevent access by unauthorized persons.
Burns, frostbite, crushing • Machine is insufficiently protected from accidental contact • Access by unauthorized persons	Observe warnings in the operating manual. Training for personnel. Prevent access by unauthorized persons. Install protection against accidental contact.
Injuries due to escaping pumped liquids when not used in accordance with specifications.	Observe warnings in the operating manual. Training for personnel. Prevent access by unauthorized persons. Provide and use personal protective equipment.

2.2 General safety instructions

Note the following regulations before carrying out any work.

2.2.1 Product safety

The machine has been constructed according to the latest technology and recognized technical safety rules. Nevertheless, operation of the machine can still put the life and health of the user or third parties at risk, damage the machine or other property.

- Only operate the machine when in perfect technical condition and only use as intended, staying aware of safety and risks, and in adherence to the instructions in this manual.
- Keep this manual and all other applicable documents complete, legible and accessible to personnel at all times.
- Refrain from any procedures and actions that would pose a risk to personnel or third parties.
- In the event of any safety-relevant malfunctions, shut down the machine immediately and have the malfunction corrected by appropriate personnel.
- In addition to the entire documentation for the product, comply with statutory or other safety and accident prevention regulations and the applicable standards and guidelines in the country where the machine is being used.

2.2.2 Obligations of the operating company

Safety-conscious operation

- Only operate the machine when in perfect technical condition and only use as
- intended, staying aware of safety and risks, and in adherence to the instructions in this manual.
- Ensure that the following safety aspects are observed and monitored:
  - Adherence to intended use
  - Statutory or other safety and accident prevention regulations
  - Safety regulations governing the handling of hazardous substances
  - Applicable standards and guidelines in the country where the machine is operated
- Provide personal protective equipment.

Material resistance

- Check resistance of the media-wetted materials to the pumped medium.
- Check resistance of the used materials to the ambient atmosphere.

Qualified personnel

- Make sure all personnel entrusted with work on the machine have read and understood this manual and all other applicable documents, especially the safety, maintenance and repair information, before they start any work.
- Organize responsibilities, areas of competence and the supervision of personnel.
- Have all work in all operating phases carried out by specialist technicians only.
- Make sure that trainee personnel only work on the machine under supervision of specialist technicians.

Safety equipment

- Provide the following safety equipment and verify its functionality:
  - for hot, cold surfaces: protection against accidental contact for the machine, provided by the operating company
  - ensure appropriate grounding

Warranty

- Obtain the manufacturer's approval prior to carrying out any modifications, repairs or alterations during the warranty period.
- Only use genuine parts or parts that have been approved by the manufacturer.

2.2.3 Obligations by personnel

- Follow the instructions on the machine and keep them legible.
- Do not remove contact protection for hot or cold surfaces during operation.
- Use personal protective equipment if necessary.
- Only work on the machine when it is at a standstill.
- For all assembly and maintenance work, disconnect the motor from the power supply and secure it against restart.
- After completing work on the machine, reinstall the safety devices according to the specifications.
- Do not use the machine as a climbing aid.

3 Layout and Function

3.1 Label

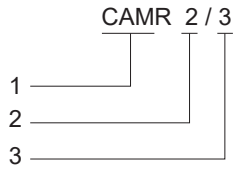

Fig. 1: Pump type label (on the name plate)

1 Series
2 Size
3 Number of stages

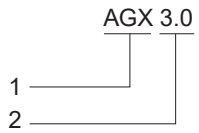

Fig. 2: Motor type label (on the name plate)

1 Construction type
2 Size

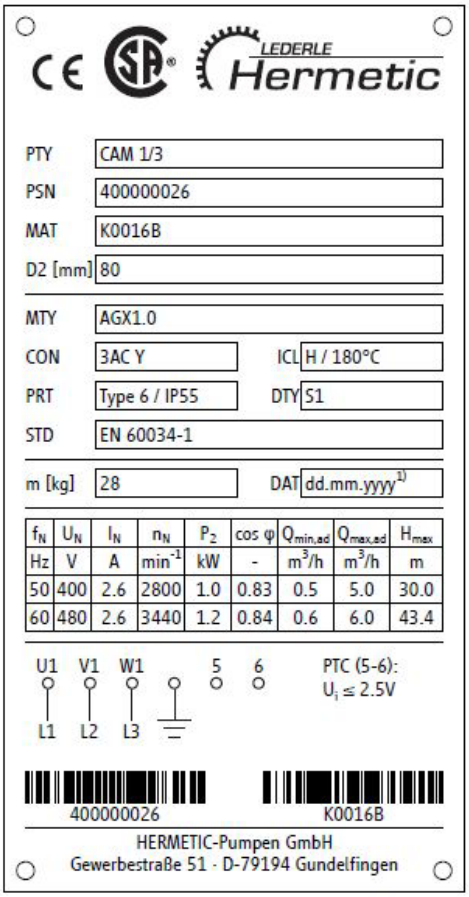

Abb. 3: Typenschild (Beispiel)

PTY	=	Pump type
PSN	=	Equipment no. / Serial no.
MAT	=	Material no.
D2	=	Impeller diameter
MTY	=	Motor type
CON	=	Connection
ICL	=	Insulation class
PRT	=	Degree of protection
DTY	=	Duty type
STD	=	Standard
m	=	Weight
DAT	=	Date of manufacture
f_N	=	Rated frequency
U_N	=	Rated voltage
I_N	=	Rated current
n_N	=	Rated speed
P_2	=	Rated output
Cos φ	=	Power factor
Q_{min},ad	=	Minimum allowable flow
Q_{max},ad	=	Maximum allowable flow
H_{max}	=	Maximum head

3.2 Layout

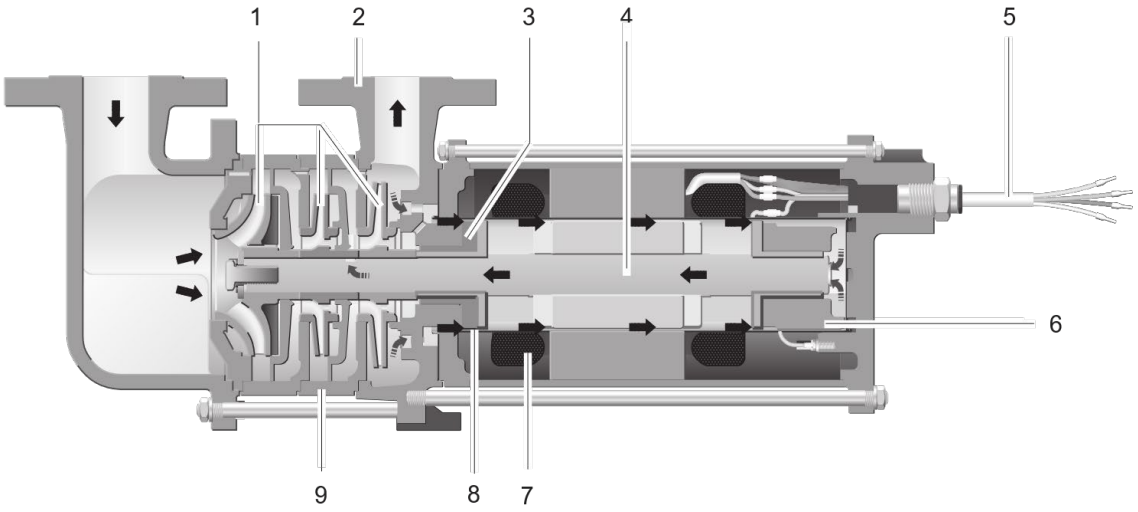

Fig. 4: CAMR layout (example CAMR 2/3)

1 Impellers
2 Pressure stage
3 Front sleeve bearing
4 Top shaft
5 Connection cable
6 Rear sleeve bearing
7 Electrical winding
8 Stator liner
9 Stage casing

4 Transport, Storage and Disposal

4.1 Transport

Weight specifications(→ 3.1 Label, page 12).

4.1.1 Unpacking and inspection on delivery

1. Unpack the machine on delivery and inspect it for damage during transport.
2. Report any damage during transport to the manufacturer immediately.
3. Dispose of packaging material according to pertinent local regulations.

PLEASE NOTE

Property damage due to falling below the permitted bending radius of the connection cable!

- Do not fall below the permitted bending radius (→ parts list, data sheet of the cable manufacturer).

4.1.2 Lifting

DANGER

Death or crushing of limbs may be caused by falling loads!

- Use lifting gear appropriate for the total weight to be transported.
- Fasten the lifting gear as illustrated below.
- Do not stand under suspended loads.

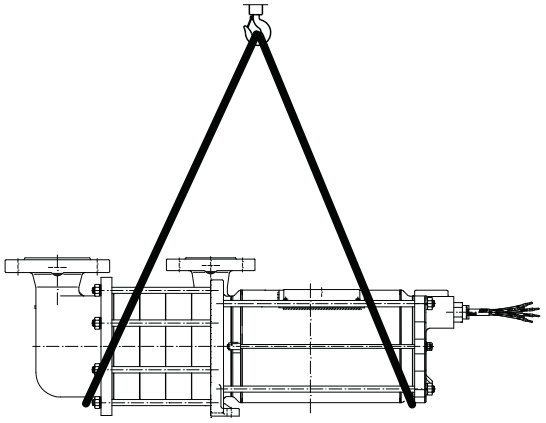

Fig. 5: Fastening the lifting gear to the pump unit

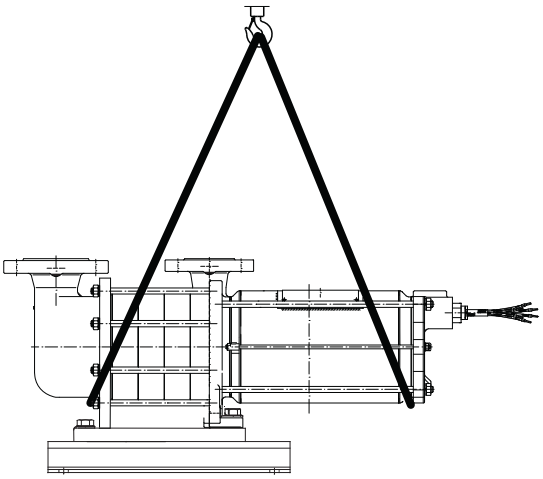

Fig. 6: Fastening lifting gear to pump unit with base plate

- Lift the unit in an orderly fashion.

4.2 Treatment for storage

Not necessary for stainless materials.
The preservation applied at the plant lasts for 12 months.

NOTE

- **Material damage may occur due to inappropriate treatment for storage!**
- Ensure the machine is treated for storage properly, both inside and outside.

1. Selecting preservatives:
   – Compatible with the machine materials
   – Compatible with the pumped liquid
2. Use the preservative specified by the manufacturer.
3. All bare metal parts should be treated with preservative, inside and outside.

4.3 Storage

NOTE

Material damage may occur due to inappropriate storage!

- Store the machine properly.

1. Close all openings with blank flanges, plugs or plastic covers.
2. Ensure the storage room is:
   – dry
   – frost-free
   – vibration-free
3. Rotate the motor shaft before installing the pump and check that it can move freely.

4.4 Disposal

WARNING

Risk of poisoning and environmental damage by the pumped liquid or oil!

- Use personal protective equipment when carrying out any work on the machine.
- Prior to the disposal of the machine: Collect and dispose any leaking pumped liquid in accordance with local regulations.

1. Empty the machine completely and clean it.
2. Dispose of the machine in accordance with local regulations.

5 Installation and connection

NOTE

Material damage can be caused by dirt!

- Do not remove any covers, transport and sealing covers until immediately before connecting the pipes to the pump.

5.1 Preparing the setup

5.1.1 Checking the ambient conditions

1. Ensure the necessary ambient conditions. (→ 9.2.1 Ambient conditions, page 45).
2. Meet the system requirements (→ brochure, technical specifications).
3. Ensure the compatibility of the process with auxiliary and operating materials (Auxiliary and operating materials in contact with the medium during assembly)

WARNING

Severe chemical reactions, fire, and explosion due to the reaction of the pumped medium with auxiliary and operating materials!

- The operator / owner must check the compatibility of the process with auxiliary and operating materials.
- Clean the machine if necessary.

PLEASE NOTE

Property damage due to contamination from auxiliary and operating materials!

- Check whether the auxiliary and operating materials contaminate the process.
- Clean the machine if necessary.

5.1.2 Preparing the installation site

- Ensure the installation site meets the following conditions:
  - Machine is freely accessible from all sides
  - There is sufficient space for the installation/removal of the pipes and for maintenance and repair work, especially for the removal and installation of the pump and the motor
  - Machine is not exposed to external vibrations (damage to bearings)

5.1.3 Preparing the foundation

- Make sure the foundation and surface are:
  - level
  - clean (no oil, dust or other impurities)
  - capable of bearing the weight of the machine unit and all operating forces
  - ensure the machine is stable and cannot tip over

5.1.4 Preparing the machine

▶ After longer storage/shutdown periods, perform the following measures:

Storage/shutdown period	Measure
2 Years	▶ If necessary, replace the seals.

Tab. 5: Measures after longer storage/shutdown periods

5.2 Planning the piping

5.2.1 Specifying supports and flange connections

NOTE

Material damage may occur due to excessive forces and torques exerted by the piping on the pump!

▶ Do not exceed the permissible values (→ general arrangement drawing with maximum nozzle loads)

1. Calculate the pipe forces, taking every possible operating condition into account:
   – Cold/warm
   – Empty/full
   – Unpressurized/pressurized
   – Positional changes of the flanges
2. Ensure the pipe supports have permanent low-friction properties and do not seize up due to corrosion.

5.2.2 Specifying nominal diameters

ℹ Keep flow resistance in pipes as low as possible.

1. Specify the nominal width of suction line ≥ nominal width of suction nozzle.
   – Suction line = feed line + calming section
2. Specify nominal width of discharge pipe ≥ nominal width of discharge nozzle.

ℹ Calculating the flow rate in the feed line.
   – A max. flow rate < 3 m/s is recommended
   – For boiling pumped media or liquid gas < 0.3 m/s is recommended

If necessary, adjust the diameter of the feed line.

5.2.3 Provide flow straightener in piping

Provide a flow straightener in the piping if one is not available in the pump suction nozzle.

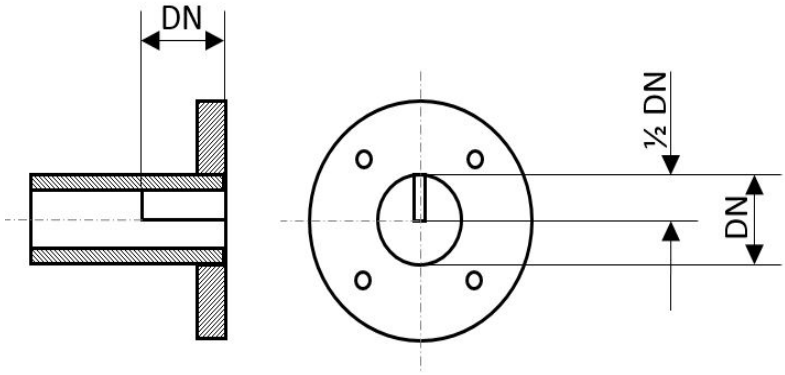

Fig. 7: Piping with flow straightener

5.2.4 Specifying the piping length

Calculating the minimum suction head (→ technical specifications)

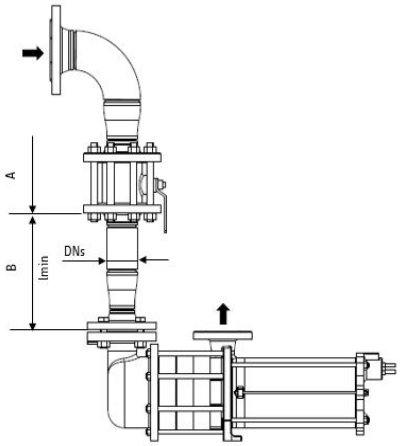

Fig. 8: Feed line and calming section

A = Feed line

B = Calming section

✓ No pipe bends, branches and fittings are permitted in the calming section.

1 $z_{A1-1} = NPSHR + R_Z + S$
z_{A1-1} – Minimum suction head [m]
R_z – Resistance of the feed line and calming section [m]
S – Safety margin min. 0.5 [m]

2 Maintain the minimum suction head when installing the pump.

3 $l_{min} = 5 * DN_s$
l_{min} – Minimum length of the calming section [mm]
DN_S – Diameter, nominal width of suction nozzle [mm]

4 Maintain the minimum length of the calming section.

Calming section: shorter lengths are possible but may limit the hydraulic performance data and / or lead to cavitation.

5.2.5 Optimising the cross-section and direction changes

1. Avoid bending radii of less than 1.5 times the nominal pipe diameter.
2. Avoid sudden changes in cross-section in the feed line.
3. Lay the feed line with a steady downward slope and not horizontally to the pump.

5.2.6 Providing safety and control devices (recommended)

1. Provide a separator in the supply pipe.
2. Provide a vortex breaker in the vessel outlet.
3. Arrange the vessel inlet and outlet at angles to each other.
4. If parallel operation is in use: provide each pump with its own vessel outlet.
5. Ensure that the pressure/temperature in the supply container drops slowly.

5.2.7 Making provisions for isolating and shutting off pipes

For maintenance and repair work.

- Provide shut-off devices in the supply pipes and vessel outelts.

5.2.8 Allow measurements of the operating conditions

1. Provide manometers for pressure measurements in the supply pipes and vessel outlets.
2. Provide for pump-side / pipe-side temperature measurements.

5.2.9 Installation Recommendations

Avoiding cavitation

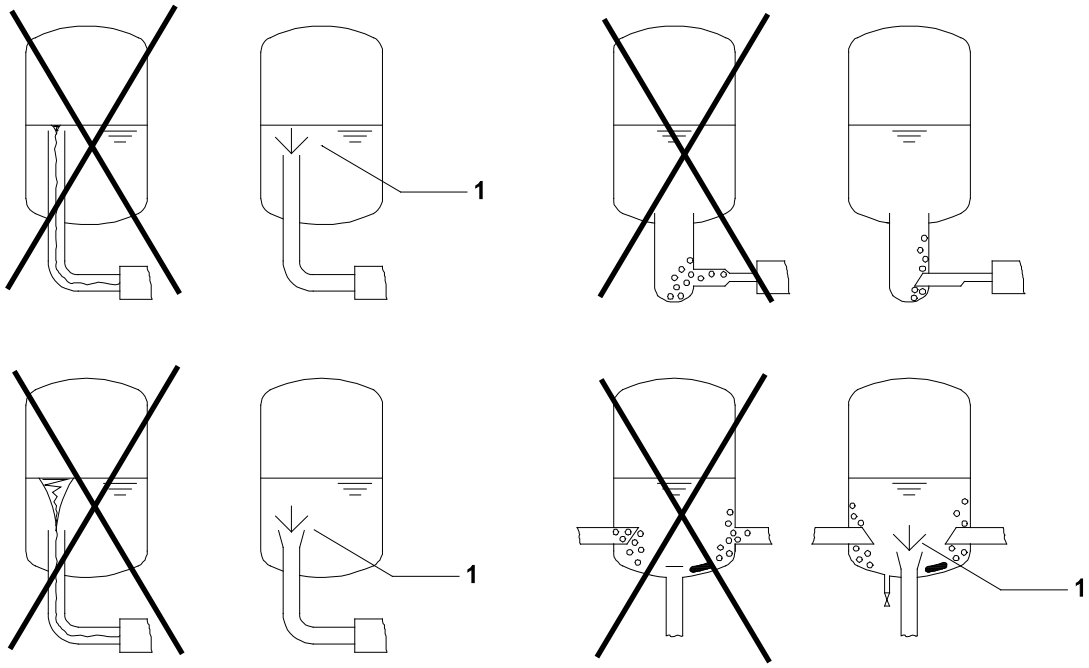

Fig. 9: Arrangement of vortex breakers at the vessel outlet

1 Vortex breaker

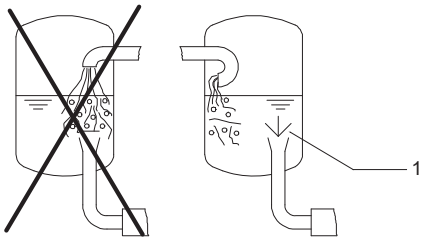

Fig. 10: Vessel inlet/vessel outlet arrangement

1 Vortex breaker

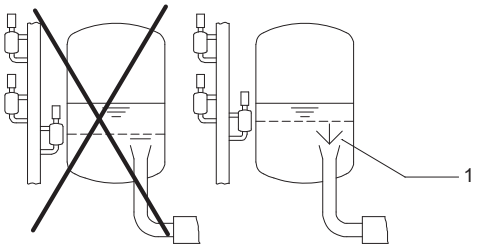

Fig. 11: Vessel inlet/vessel outlet arrangement

1 Vortex breaker

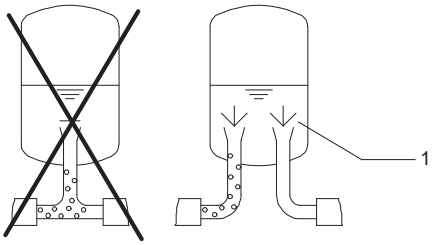

Fig. 12: Parallel operation arrangement

1 Vortex breaker

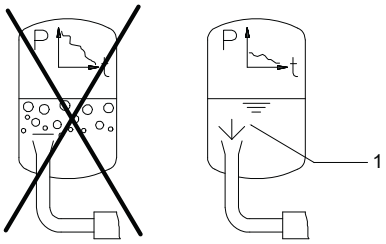

Fig. 13: Slow pressure/temperature drop

1 Vortex breaker

Automatic venting

1. Install a non-return valve between the outlet flange and the gate valve to ensure the medium does not flow back when the pump is switched off.
2. Provide a bypass pipe to enable venting:
   - guide the bypass pipe from the discharge pipe between the pump and non-return valve into the supply container's gas phase.
   - In doing so make sure that there is no non-return valve in the bypass pipe

PLEASE NOTE

Material damage caused by an accumulation of gas!

- ▶ Make sure that an accumulation of gas is not possible in the suction pipe or valves under any circumstances.
  - Gas bubbles must be able to rise unhindered to the supply container when the pump is switched off.
- ▶ Make sure that larger accumulations of gases are avoided in the discharge pipe between the pump and non-return valve.
  - Installing the non-return valve valve as close as possible after the outlet flange
  - Providing a bypass pipe

3. For parallel operation:
   - Separate supplies for the pumps
   - Separate bypass pipes

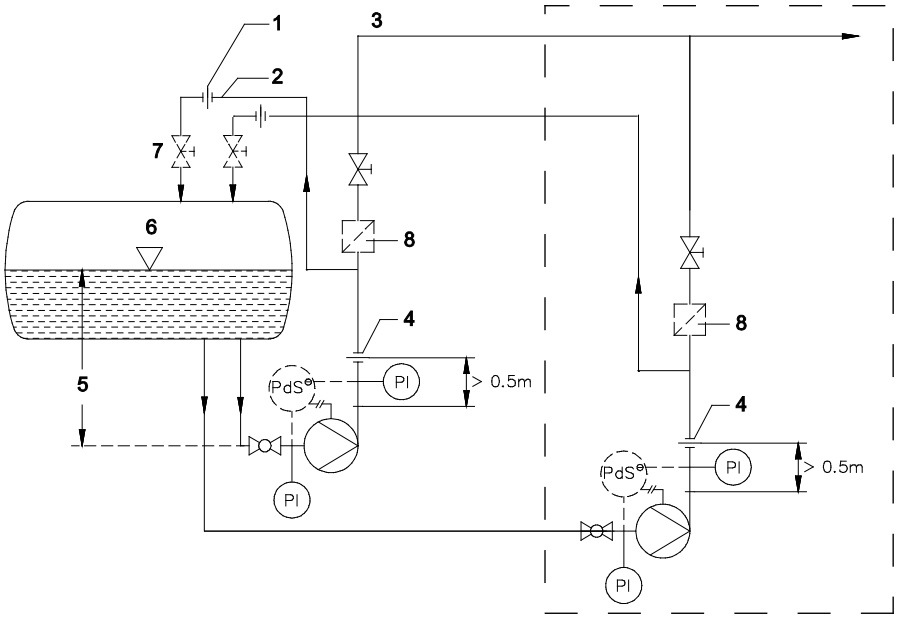

Fig. 14: Automatic venting (single pump - parallel pumps)

1 Qmin – orifice (directly in front of gate valve / supply container)
2 Bypass pipe
3 Consumer
4 Qmax – orifice
5 Suction head
6 Supply container
7 Gate valve (directly in front of supply container)
8 Non-return valve

5.3 Connecting the pipes

5.3.1 Keeping the piping clean

NOTE

Material damage may occur due to impurities in the machine!

- ▶ Ensure no impurities can enter the machine:
  - – Flush the pipes so that scales, welding beads and other foreign objects do not damage the machine.
  - – If necessary, install a sieve in the supply pipe during the start-up phase.

1. Clean all piping parts and fittings prior to assembly.
2. Ensure no flange seals protrude inwards.
3. Remove any blank flanges, plugs, protective foils and/or protective paint from the flanges.

CAUTION

Only for machines in the food grade sector

Contamination of food!

- ▶ Clean surfaces that come into contact with the product with a suitable rinsing process.
- ▶ Make sure that auxiliary materials do not damage pump parts.

Pressure testing of pipes with water can cause corrosion. Unless start-up is intended to be carried out shortly, compliance with (→ 6.3 Shutting down the machine, page 34) is required.

5.3.2 Mounting the supply pipe

1. Remove the transport and sealing covers on the machine.
2. Run the pipes with a continuous downwards slope to the pump.
3. Ensure no seals protrude inwards.

5.3.3 Installing the discharge pipe

PLEASE NOTE

Damages can result from incorrect connection!

▶ Connect the pipes properly.

1. Remove the transport and sealing covers from the pump.
2. Installing the discharge pipe:
   – Qmax orifice at least 0.5 m above the outlet flange of the pump
3. Installing the bypass pipe:
   – in front of the non-return valve in the discharge pipe
   – Run the pipe with a continuous upward slope to the supply container
   – Qmin orifice as close as possible to the supply container
4. Ensure no seals protrude inwards.

5.3.4 Ensure stress-free pipe connections

1. Ensure that
   – the permissible flange forces are not exceeded
   – the pump is not used as an anchor point for pipes
2. When pumping cold / hot liquids, ensure that
   – the pipes have been laid suitably for expansion
   – the pipes have been spring-suspended or expansion joints have been used

5.4 Electrical connection

⚠ **DANGER**

Risk of death due to electric shock!

▶ Have all electrical work carried out by qualified electricians only.

5.4.1 Providing a motor protection switch

▶ Provide a motor protection switch in accordance with VDE 0660 with the following specifications:
   – Current rating on the name plate
   – Motor operation type = S1
   – Maximum permissible switch frequency in normal operation = 6 start-ups/ hour
   – Minimum pause between 2 starts = 10 minutes

5.4.2 Connecting the motor

ℹ Connect the terminals as follows for the correct sense of rotation:
   – U1-L1
   – V1-L2
   – W1-L3.

For motors with rotation monitor (→manual ROMi / ROMe)

1. Connect the motor according to the connection diagram.
2. Ground the motor using the grounding conductor of the cable connection.
   – If available, also ground the motor using the grounding terminal on the rear motor casing cover.
3. Install an EMERGENCY STOP switch (recommendation).

PLEASE NOTE

Property damage due to falling below the permitted bending radius of the connection cable!

▶ Do not fall below the permitted bending radius (→ parts list, data sheet of the cable manufacturer).

5.5 Frequency converter operation

The following instructions must be complied with for operation of the motor with frequency converters.

5.5.1 Approved frequency range

1. The motors are suitable for operation with frequency converters in the frequency range of minimum 25 Hz to the maximum depending on the rated motor frequency.
   – Compliance with the information specified on the data sheet, canned motor or rating plate.
   – Depending on the pumped liquid, the frequency range cited above can be significantly restricted.

5.5.2 Output filter

HERMETIC canned motors are subject to the following limit values:

1. Maximum values for conductor-conductor voltage $ULL_{,max}$
   – H-winding: 1460 V
   – C220 / R-winding: 1300 V
   – C400-winding: 1000 V
2. Edge steepness: du/dt
   – H-winding: < 1500 V/µs
   – C220 / R-winding: < 1000 V/µs
   – C400-winding: < 1000 V/µs

NOTE

Motor damage due to impermissibly high voltage peaks!

▶ Always provide du/dt-filter

▶ For line lengths > 150 m at 690 V or > 300 m at 400-500 V provide sinus filter.

For operation with sinus filter, a voltage drop of approximately 15-20% must be taken into account. This voltage drop must either be compensated (step-up transformer) or taken into account in the winding configuration.

5.5.3 Installation and operation

NOTE

Occurrence of leakage current!

- ▶ Install frequency converter and canned motor on a common earth potential.

Operation with frequency converter can result in an increased noise level.

NOTE

Bearing damage due to starting up too slowly!

- ▶ From a standstill, run up canned motor to the approved minimum frequency within 5 s.

To comply with the guideline for electromagnetic compatibility, shielded cables must be used between the canned motor and frequency inverter.

5.5.4 Avoidance of rapid frequency changes

Consequences of rapid frequency changes:

1. Pressure changes and pressure surges in pump and pipes
2. Impermissible heating of the canned motor

Frequency gradients

- Frequencies 25 - 40 Hz approximately 4 Hz/s
- Frequencies < 60 Hz approximately 2 Hz/s
- Frequencies > 60 Hz approximately 1 Hz/s

6 Operation

6.1 Putting the machine into service for the first time

6.1.1 Identifying the machine type

- Identify the machine type (→ technical specification).

6.1.2 Checking the shutdown period

- After a shutdown period of > 2 years (→ 5.1.4 Preparing the machine, page 19).

6.1.3 Filling up and venting

WARNING

Risk of injury and poisoning due to hazardous pumped liquids!

- Use personal protective equipment when carrying out any work on the machine.
- Safely collect any leaking pumped liquid and dispose of it in accordance with environmental rules and requirements.

PLEASE NOTE

Material damage caused by dry running!

- Make sure the machine is filled up and bled properly.

1. Open shut-off devices in the bypass pipe.
2. Open the feed-side fitting.
3. Fill the pump and the feed line with pumped medium.
4. Wait until the pump casing has reached the temperature of the pumped medium.
   – Avoid temperature gradients of >5 K/min.
5. Make sure that no pipe connections are leaking.

6.1.4 Checking the sense of rotation

1. Switch on the motor.
2. Check the operating parameters or rotary field of the motor.

NOTE

Loosened threaded parts after operation with the wrong direction of rotation

- Ensure that threaded parts are firmly seated.

DANGER

Risk of death due to electric shock!

- Have all electrical work carried out by qualified electricians only.

3. In the event of deviating operational parameters or incorrect field of rotation: swap two phases.
4. Re-establish the electrical connections of the motor.

6.1.5 Turning On

- ✓ Machine correctly set up and connected
- ✓ All connections stress-free and sealed
- ✓ All safety equipment installed and tested for functionality
- ✓ Machine properly prepared, filled up, and bled

DANGER

Risk of injury due to running machine!

- ▶ Do not touch the running machine.
- ▶ Do not carry out any work on the running machine.

DANGER

Risk of injury and poisoning due to pumped liquid spraying out!

- ▶ Use personal protective equipment when carrying out any work on the machine.

PLEASE NOTE

Material damage caused by dry running!

- ▶ Make sure the pump is filled and bled properly.
- ▶ Observe the permissible flow rate (→ technical specification, performance curve).

NOTE

Risk of cavitation when throttling down the supply flow rate!

- ▶ Fully open the supply-side fitting and do not use it to adjust the delivery flow.
- ▶ Observe the permissible flow rate (→ technical specification).

NOTE

Material damage caused by overheating!

- ▶ Do not operate the pump while the pressure-side fitting is closed.
- ▶ Observe the permissible flow rate (→ technical specification).

1. Open the supply-side fitting.
2. Close the pressure-side fitting.
3. Switch on the motor and make sure it is running smoothly.
4. Once the motor has reached its nominal speed, open the pressure-side fitting slowly until the operating point is reached.
5. After the first load under pressure and at operating temperature, check that the machine is not leaking.

6.1.6 Switching off

1. Switch off the motor.
2. Check all tie bolts and tighten them if necessary.

6.2 Operating

6.2.1 Turning on

✓ Pump initially put into service properly

✓ Pump prepared, filled and bled properly

DANGER

Risk of injury due to running machine!

▶ Do not touch the running machine.

▶ Do not carry out any work on the running machine.

DANGER

Risk of injury and poisoning due to pumped liquid spraying out!

▶ Use personal protective equipment when carrying out any work on the machine.

NOTE

Risk of cavitation when throttling down the supply flow rate!

▶ Fully open the supply-side fitting and do not use it to adjust the delivery flow.

NOTE

Material damage caused by overheating!

▶ Do not operate the pump while the pressure-side fitting is closed.

▶ Observe the permissible flow rate (→ technical specification).

1. Open the supply-side fitting.
2. Close the pressure-side fitting.
3. Switch on the motor and make sure it is running smoothly.
4. Once the motor has reached its nominal speed, open the pressure-side fitting slowly until the operating point is reached.

6.2.2 Switching off

✓ Pressure-side fitting closed (recommended)

WARNING

Risk of injury due to cold surfaces!

▶ Use personal protective equipment when carrying out any work on the machine.

▶ Switch off the motor.

6.3 Shutting down the machine

WARNING

Risk of injury and poisoning due to hazardous pumped liquids!

- Safely collect any leaking pumped liquid and dispose of it in accordance with environmental rules and requirements.

- Take the following measures whenever the machine is shut down:

Machine is	Measure
...shut down for a prolonged period	▶ Take measures appropriate to the pumped liquid (→ 6.2.1 Turning on, page 33).
...emptied	▶ Close the suction-side valve and pressure-side fittings.
...dismounted	▶ Isolate the motor from its power supply and secure it against unauthorized switch-on.
...put into storage	▶ Follow the storage instructions (→ 4.3 Storage, page 17).

Tab. 6: Measures to be taken if the machine is shut down

Behavior of he pumped liquid	Duration of shutdown (depending on process)	
	Short	Long
Remains liquid, non-corrosive	–	–
Remains liquid, corrosive	–	▶ Empty the pump and containers. ▶ Treat the pump and containers with preservative.

Tab. 7: Measures depending on the behavior of the pumped liquid

NOTE

Blocking of rotor due to ice crystals!

- In the case of operation with CO_2 as the pumped medium, the formation of ice crystals is possible after the system has been switched off.
- Reactivate the pump after 24 hours at the latest.

6.4 Start-up following a shutdown period

In the event of shutdown periods of more than 2 years:

- (→ 5.1.4 Preparing the machine, page 19).
- Carry out all steps as for the initial start-up (→ 6.1 Putting the machine into service for the first time, page 30).

6.5 Operating the stand-by pump

1. Preparing the stand-by pump:
   - Putting the pump into service for the first time
   - (→ 6.1 Putting the machine into service for the first time, page 30).
   - Filling and bleeding the stand-by pump.
2. Using the stand-by pump (→ 6.2.1 Turning on, page 33).

7 Maintenance

Trained service technicians are available for fitting and repair work. Present a pumped medium certificate (DIN safety data sheet or safety certificate) when requesting service.

Service and maintenance work may only be carried out by specialist technicians.

7.1 Inspections

The inspection intervals depend on the operational strain on the machine.

DANGER

Risk of injury due to running machine!

- Do not touch the running machine.
- Do not carry out any work on the running machine.

WARNING

Risk of injury and poisoning due to hazardous pumped liquids!

- Use personal protective equipment when carrying out any work on the pump.

1. Check at appropriate intervals:
   - Adhere to the minimum and maximum flow rates (→ technical specification)
   - Normal operating conditions unchanged
2. For trouble-free operation, always ensure the following:
   - Minimum suction head
   - No dry running
   - No leaks
   - No cavitation (max. pressure difference between suction and outlet flanges)
   - Open gate valves on supply side
   - No unusual running noises or vibrations

7.2 Repairs

DANGER

Risk of injury due to running machine!

- Do not touch the running machine.
- Do not carry out any work on the running machine.
- Isolate the motor from its supply voltage and secure it against being switched back on again when carrying out any fitting or maintenance work.

DANGER

Risk of death due to electric shock!

- Have all electrical work carried out by qualified electricians only.

WARNING

Risk of injury and poisoning due to hazardous pumped liquids and hot or cold components!

- Use personal protective equipment for all tasks on the machine.
- Prior to all tasks, allow pump and motor to cool down / warm up to ambient temperature.
- Ensure that the pump is de-pressurized.
- Drain the machine, safely collect pumped liquid, and dispose of it in an environmentally-responsible manner.

WARNING

Risk of injury during maintenance!

- Secure the pressure-side slide valve against accidental opening.
- Wear protective gloves; components can have very sharp edges.
- Secure machine parts against accidental moving.
- Use suitable lifting gear and slings for heavy components.
- (→ Observe the valid local regulations for work safety and health protection).

7.2.1 Disassembly

PLEASE NOTE

Property damage due to improper disassembly!

- ▶ Heat up tight-fitting bearing sleeves.

WARNING

Danger of injury by crushing limbs due to uncontrolled movement of parts!

- ▶ Put disassembled pump parts and tools down in a safe place.
- ▶ Use tilt and roll-away protection.

Preparing for disassembly

- ✓ Machine must be de-pressurized
- ✓ Machine must be completely empty, flushed, and decontaminated
- ✓ Electrical connections isolated and motor secured against restarting
- ✓ Machine thawed out.
- ✓ Pressure gauge lines, pressure gauge and brackets removed

The machines have a multi-stage design (sectional construction)

- ▶ Note during disassembly:
  - – Mark mounting positions and positions of all components before disassembly.
  - – Remove components concentrically without canting.

Dismount the pump and motor part:

For the designations and positions of the components (→ sectional drawing). Mark the position of **162**, **108** and **101**.

Detaching the parts in the following sequence:

920.01

162.00

131.00

931.01

906.00

552.01

230.01

174.02

108.00

940.01

Remove other machine parts **230**, **174**, **108** and **940** from **819** without canting.

920.02

101.00

Pull out **819** with **821** carefully to the front.

– Make sure that **816** is not damaged.

529.01

932.01

529.02

To dismount the motor-side carbon bearing **545.02** (only for motors AGX 3.0, 4.5 and 6.5):

– Loosen **900.03**.

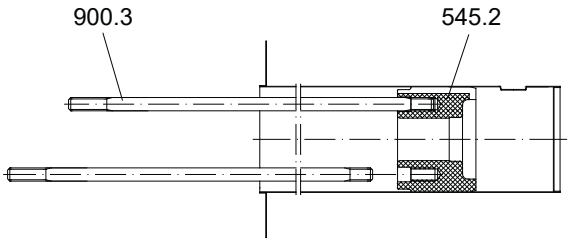

Fig. 15: Dismounting the carbon bearing

Dismounting the stator:

Detaching the parts in the following sequence:

920.12

900.05

160.00

When doing this, label the electric supply lines and disconnect at the connection point.

816

3. Press out of the stator in the direction of the pump.

4. 812.01

Inspect the stator winding for possible damage:

– If necessary, replace the stator or rewind it.

7.2.2 Returning the pump to the manufacturer

- ✓ Pump unpressurized
- ✓ Pump completely empty
- ✓ Secure motor against being switched on again
- ✓ Pump de-iced
- ✓ Manometer lines, manometer and holdings dismounted

1. Enclose a truthful and fully completed document of compliance when returning pumps or components to the manufacturer (→ 9.3 Safety certificate, page 46).
2. Take necessary measures, depending on the required repair work, as listed in the table below when returning the pump to the manufacturer.

Repairs	Measure for return
...at the customer's premises	▶ Return the defective component to the manufacturer.
...at the manufacturer's premises	▶ Flush the pump and decontaminate it if it was used for hazardous pumped liquids. ▶ Return the complete pump unit (not disassembled) to the manufacturer.
...at the manufacturer's premises for warranty repairs	▶ Only in the event of hazardous pumped liquid: flush and decontaminate the pump. ▶ Return the complete pump unit (not disassembled) to the manufacturer.

Tab. 8: Measures for return

7.2.3 Assembly

Preparing for assembly

1. To be observed during assembly:
   - Replace worn parts with original spare parts (→ see gap dimension report, gap dimension table and acceptance report if included in the documentation).
   - Replace seals.
   - Observe the specified tightening torques (→ 1.2 Other applicable documents, page 6).
   - Reassemble the components concentrically without canting according to the attached marking.
2. Clean all parts. Make sure that the attached markings are not removed.
3. Assemble the machine (→ sectional drawing). Assembly takes place in reverse order of disassembly. The following sections show special characteristics of assembly.

Installing

NOTE

Material damage due to inappropriate mounting!

- Ensure that one partial current drill hole is assigned at the top of the bearing carrier **381**.

With new bearing bushes **545.01/02** and bearing sleeves **529.01/02** make sure:

- **904.50/51/52** adjusted correctly
- Groove in carbon bearing and notch flush in stator liner are aligned (the bearing can otherwise not be fully inserted).

Completing assembly

- Check the machine (→ technical specification):
  - Compressive strength
  - Leak proofness

7.3 Ordering spare parts

For trouble-free replacement in the event of faults, we recommend keeping entire insert units or spare pumps available on site.

The application guidelines conforming to DIN 24296 recommend provisioning for two years of continuous use (→ parts list).

- Have the following information ready to hand when ordering spare parts (→ name plate):
  - Short description of the pump
  - Equipment number
  - Year of manufacture
  - Part number
  - Designation
  - Quantity

8 Troubleshooting

8.1 Malfunctions

Possible malfunctions are identified by a number in the following table. This number identifies the respective cause and remedy in the troubleshooting list.

Malfunction	Number
Machine not pumping	1
Pumping rate insufficient	2
Pumping rate excessive	3
Pumping pressure insufficient	4
Pumping pressure excessive	5
Machine running roughly	6
Sleeve bearings temperature too high	7
Machine leaking	8
Excessive motor power uptake	9

Tab. 9: Malfunction/number assignment

8.2 Fault rectification

If malfunctions occur which are not specified in the following table or cannot be traced back to the specified causes, please consult the manufacturer.

Malfunction number									Cause	Elimination
1	2	3	4	5	6	7	8	9		
X	X	–	X	–	X	–	–	–	Supply pipe or pump blocked or encrusted	▶ Clean the supply pipe or pump.
X	X	–	X	–	X	–	–	–	Gas sucked into pump	▶ Seal the source of malfunction.
X	X	–	X	–	X	–	–	–	Excessive gas proportion: Pump is cavitated	▶ Consult the manufacturer.
X	X	–	X	–	X	–	–	–	Pump running in the wrong rotational direction	▶ Swap any two phases at the motor.
X	X	–	X	–	X	–	–	–	Impeller out of balance or blocked	▶ Dismount the pump and inspect it for dry-running damage. ▶ Clean the impeller.
X	X	–	–	X	X	–	–	–	Discharge pipe blocked	▶ Clean the discharge pipe.
X	X	–	X	–	–	–	–	–	Motor speed too low	▶ Compare the required motor speed with the specifications on the pump name plate. Replace the motor, if necessary. ▶ Increase the motor speed if speed control is available.

Malfunction number									Cause	Elimination
1	2	3	4	5	6	7	8	9		
X	–	–	–	–	–	–	–	–	Transport and sealing cover still in place	▶ Remove the transport and sealing cover. ▶ Dismantle the machine and check for dry-run damage.
X	–	–	–	–	–	–	–	–	Supply pipe and/or discharge pipe closed by fitting	▶ Open the fitting.
X	–	–	–	–	X	–	–	–	Supply pipe and machine bled incorrectly or not filled completely	▶ Fill up the machine and/or pipe completely and bleed them.
X	–	–	–	–	X	–	–	–	Supply pipe contains gas pockets	▶ Install the fitting for venting. ▶ Correct the piping layout.
–	X	–	X	–	–	–	–	–	Geodetic differential head and/or pipe flow resistance too high	▶ Remove sediments from the pump and/or discharge pipe. ▶ Install a larger impeller and consult the manufacturer.
–	X	–	X	–	–	–	–	–	Supply pipe not completely open	▶ Open the fitting.
–	X	–	X	–	X	–	–	–	Hydraulic parts of the machine contaminated, clotted or encrusted	▶ Dismantle the machine. ▶ Clean the parts.
–	X	–	X	–	X	–	–	–	Cross section of supply pipe too narrow	▶ Increase the cross-section. ▶ Remove any encrustations from the supply pipe. ▶ Open the fitting completely.
–	X	–	X	–	X	–	–	–	NPSHR is greater than NPSH	▶ Increase the suction head. ▶ Consult the manufacturer.
–	X	–	X	–	X	–	–	–	Pumped liquid temperature too high: Pump is cavitated	▶ Increase the suction head. ▶ Lower the temperature. ▶ Consult manufacturer.
–	X	–	X	–	X	–	–	–	Pump parts worn	▶ Replace the worn pump parts.
–	X	–	X	–	X	–	–	X	Motor running on 2 phases	▶ Check the fuse and replace it if necessary. ▶ Check the cable connections and insulation.
–	X	X	X	X	–	–	–	X	Density, specific heat capacity, vapour pressure or viscosity of the pumped liquid outside the range specified for the pump	▶ Consult the manufacturer.
–	X	–	–	X	X	–	–	–	Pressure-side fitting not opened wide enough	▶ Open the pressure-side fitting.

Malfunction number									Cause	Elimination
1	2	3	4	5	6	7	8	9		
–	–	X	X	–	X	–	–	X	Pressure-side fitting opened too wide	▶ Throttle down at the pressure-side fitting. ▶ Provide a Q_{max} orifice or flow control valve ▶ Rework impeller on the lathe. Consult the manufacturer and adjust the impeller diameter.
–	–	X	–	–	X	–	–	X	Geodetic differential head, pipe flow resistance and/or other resistance lower than specified	▶ Throttle down the flow rate at the pressure-side fitting. Observe the minimum flow rate. ▶ Rework impeller on the lathe. Consult the manufacturer and adjust the impeller diameter.
–	–	X	–	X	X	X	–	X	Motor speed too high	▶ Reduce speed with frequency converter.
–	–	X	–	X	X	–	–	X	Impeller diameter too large	▶ Throttle down the flow rate at the pressure-side fitting. Observe the minimum flow rate. ▶ Rework impeller on the lathe. Consult the manufacturer and adjust the impeller diameter.
–	–	–	–	–	X	–	X	X	Machine is deformed	▶ Check the pipes and fastening of the machine.
–	–	–	–	–	–	X	–	–	Not enough pumped liquid, does not correspond to technical specification	▶ Add pumped liquid. ▶ Comply with the permissible range of application. ▶ Consult the manufacturer.
–	–	–	–	–	–	–	X	–	Tie bolts not tightened properly	▶ Tighten the tie bolts.
–	–	–	–	–	–	–	X	–	Housing seal defective	▶ Replace the housing seal.
–	–	–	–	–	–	–	X	–	Can seal defective	▶ Replace the can seal.

Tab. 10: Fault table

8.3 Contact the manufacturer

Should there be any problems or questions, please contact:

customer-service@hermetic-pumpen.com

9 Appendix

9.1 Recommended spare parts

Detailed ordering information (→ parts list).

Item no.	Designation
400.XX	Gaskets
545.01/02	Bearing bushes
529.01/02	Bearing sleeves

Tab. 11: Recommended spare parts

9.2 Technical specifications

See technical specification.

9.2.1 Ambient conditions

Ambient temperature: -50 °C to 50 °C

Operation under any other ambient conditions should be agreed with the manufacturer.

9.2.2 Sound pressure level

Sound pressure level calculated according to VDI 3743-1:2003: < 70 dB.

9.3 Safety certificate

Please copy this document and send it together with the machine.

FB-039-EN

SAFETY / GRAS CERTIFICATE

All industrial companies are obliged by statutory regulations to protect their employees, other people and the environment from detrimental effects when handling hazardous substances.
Products and their components are therefore only repaired or inspected if the following declaration is submitted after being filled out properly and completely and signed by an authorized and qualified specialist technician:

1. **Confirmation of complete emptying and cleaning (decontamination), filled out GRAS certificate**
2. **Information on Hazard statements of handled substances according to GHS as per following query**
3. **Safety data sheet of all handled substances according to EC regulation No. 1272/2008**

If safety precautions have to be taken by the operating company in spite of the product being completely emptied and cleaned, the required information must be submitted. This document of compliance and the safety data sheet are part of the repair or inspection order.

Note: For health and safety reasons, HERMETIC-Pumpen can only process and accept goods if the following fields are filled out correctly and completely. HERMETIC-Pumpen GmbH carries out a risk assessment of the product on the basis of the documents supplied by you in advance. If the result of the risk assessment is positive, you will receive an incoming goods inspection seal for the release of the delivery of the product, which must be affixed to the product in a clearly visible manner. We hope for your understanding that for reasons of occupational health and safety, it is not possible to accept goods without prior approval by HERMETIC-Pumpen GmbH from 1.7.2019.

We declare the registered or enclosed product and accessories as follows:

Pump type, motor type: _____

HERMETIC Serial No.: _____

Area of application: _____

The product came into contact with the following media, which need to be specially marked or contain harmful substances:

_____

- ☐ Safety data sheets of the pumped media and cleaning liquids are enclosed with this safety / GRAS certificate.
- ☐ The product has been completely emptied and thoroughly cleaned inside and outside prior to shipment or provision.
- ☐ The product is free from residues with following Hazard statements: H200, H201, H202, H203, H204, H205, H230, H231, H250 H300, H301, H310, H311, H330, H331, EUH 001, EUH 006, EUH 018, EUH 019, EUH 029, EUH 031, EUH 032

  Note: In the case of residues of substances with the above mentioned Hazard statements, special handling of the pump and, if necessary, preparatory disassembly and cleaning of the terminal box and stator chamber may be necessary. We will contact you as soon as all information is available.
- ☐ The product is free from other substances hazardous to health.
- ☐ Special safety precautions are not required for further handling.

The following safety precautions are required for flushing media, medium residues and disposal:

_____
_____
_____

Chemical residue can present the following hazards:

☐	☐	☐
☐	☐	☐
☐	☐	☐

Approved cleaning product _____ ☐ will be supplied
Approved protective equipment _____ ☐ will be supplied

HERMETIC-Pumpen GmbH · Gewerbestraße 51 · 79194 Gundelfingen · Germany · phone +49 761 5830-0 · www.hermetic-pumpen.com
Registergericht Freiburg HRB 365 · Geschäftsführer: Nicolaus Krämer, Sebastian Dahlke · USt-Id Nr. DE 142212033

FB-039-EN

We confirm that the above data and information are correct and complete and that dispatch is effected in accordance with the relevant legal provisions.

Company/institute: _____

Street: _____

Postal Code, Place: _____

Phone: _____

Name: _____

Position: _____

Date: _____ Signature: _____

Company stamp:

HERMETIC-Pumpen GmbH · Gewerbestraße 51 · 79194 Gundelfingen · Germany · phone +49 761 5830-0 · www.hermetic-pumpen.com
Registergericht Freiburg HRB 365 · Geschäftsführer: Nicolaus Krämer, Sebastian Dahlke · USt-Id Nr. DE 142212033

Fig. 16: Safety certificate

9.4 Declarations in accordance with the EC Machinery Directive

9.4.1 Declaration of conformity in accordance with the EC Machinery Directive

The following declaration does not include a serial number or signatures. The original declaration is supplied with the respective machine.

EC DECLARATION OF CONFORMITY

according to Directive 2006/42/EC, Annex II Part 1 Section A

We hereby declare that the following machinery:

Denomination:	Centrifugal pump with canned motor
Pump:	CAM x/y
Motor:	AGXx.y
Equipment No.:	41100xxxxx/yyy-zz
Year:	20xx

complies with all relevant provisions of the following Directives regarding its conceptual design and its construction as well as its state in which it was placed on the market by us:

- Directive 2006/42/EC of 17 May 2006 on machinery

Harmonised standards used, as referred to in Article 7(2):

- EN ISO 12100: 2011-03 — Safety of machinery - Basic concepts, general principles for design – Risk assessment and Risk minimization
- EN 809: 1998 — Pumps and pump units for liquids - Common safety requirements
- EN 60034-1: 2011-02 — Rotating electrical machines - Part 1: Rating and performance
- EN 60034-5: 2007-09 — Rotating electrical machines - Part 5: Degrees of protection provided by integral design of rotating electrical machines (IP code) - Classification

Person authorised to compile the technical file:
Michael Maier, HERMETIC-Pumpen GmbH, Gewerbestrasse 51, D-79194 Gundelfingen

Gundelfingen, 2023-09-01

C. Wittmann
Director of Technical Office

HERMETIC-Pumpen GmbH · Gewerbestraße 51 · 79194 Gundelfingen · Germany · phone +49 761 5830-0 · www.hermetic-pumpen.com
Registergericht Freiburg HRB 365 · Geschäftsführer: Nicolaus Krämer, Sebastian Dahlke · USt-Id Nr. DE 142212033

Fig. 17: Declaration of conformity in accordance with the EC Machinery Directive